30" CLASSIC OVER-AND-UNDER REFRIGERATOR/FREEZER WITH INTERNAL DISPENSER - PANEL READY

CL3050UID/O

FEATURES

Legacy product image shown; actual product varies slightly.

Split Climate™ intelligent cooling system revolutionizes Sub-Zero's already-superior preservation capabilities, keeping food even fresher for longer

ClearSight™ LED lighting system fully illuminates the interior and reduces shadows

Sleek stainless accents trim the interior, matching the sophistication of the exterior

Touch control panel is conveniently located for easy access at the tap of a finger

Night Mode optimizes the interior lighting based on the detected ambient light, reducing the brightness by 90% in dim environments

Delivers fresh, filtered water through an internal dispenser located discreetly within the refrigerator

Lift the base of the flip-up dairy compartment to store taller items on the shelf below

Filtered ice is ready on demand; activate Max Ice Mode to temporarily increase ice production

Position adjustable door bins at various heights to accommodate assorted items

Wi-Fi enabled for convenient remote access using the Sub-Zero Group Owner's App

Sub-Zero offers an industry-leading full two-year warranty on appliances, along with a full five-year sealed system warranty

ACCESSORIES

Air Purification Cartridge

Custom Front Panel Mounting Kit

Custom Side Panel Mounting Kit

Egg Container

Grille Frame - 84"

Stainless Steel Flush Inset Grille Panel

Stainless Steel Pro Louvered Grille - 84"

Stainless Steel Side Panel

Water Filter

Dual Installation Kits

Stainless Steel Flush Inset Door and Drawer Panels with Pro Handle

Stainless Steel Flush Inset Door and Drawer Panels with Tubular Handle

Classic Stainless Steel Pro Louvered Grilles

Stainless Steel Pro Handles

Stainless Steel Tubular Handles

Stainless Steel Kickplate

Accessories are available through an authorized dealer.
For local dealer information, visit subzero-wolf.com/locator.

HANDLE ACCESSORIES

PRO

TUBULAR

PRODUCT DETAILS

REFRIGERATOR

- 4 glass refrigerator shelves (3 adjustable; 1 stationary)
- 2 crisper drawers with removable dividers
- 3 refrigerator door bins (2 adjustable; 1 stationary)
- 1 flip-up dairy compartment
- Air purification system
- Internal water dispenser
- LED refrigerator lights

FREEZER

- Full-extension drawer
- Water filtration system
- Automatic ice maker with removable ice container
- LED freezer lights

Specifications are subject to change without notice. This information was generated on April 26, 2024. Verify specifications prior to finalizing your cabinetry/enclosures.

30" CLASSIC OVER-AND-UNDER REFRIGERATOR/FREEZER WITH INTERNAL DISPENSER - PANEL READY

PRODUCT SPECIFICATIONS

Model	CL3050UID/O
Dimensions	30"W x 84"H x 24"D
Refrigerator Capacity	12.8 cu. ft.
Freezer Capacity	4.2 cu. ft.
Weight	500 lbs
Plumbing Supply	1/4" OD copper, braided stainless steel or PEX tubing
Plumbing Pressure	35–120 psi
Receptacle	3-prong grounding-type

PLUMBING

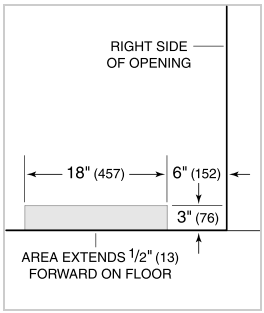

PANEL SPECIFICATIONS For complete panels specifications including width/height, weight requirements, thickness requirements and offset details visit subzero-wolf.com/builtinconfigurator.

NOTE: Dimensions in parenthesis are in millimeters unless otherwise specified

INTERIOR VIEW

This illustration is intended for interior reference only and may not represent the exterior of the model being specified.

DIMENSIONS

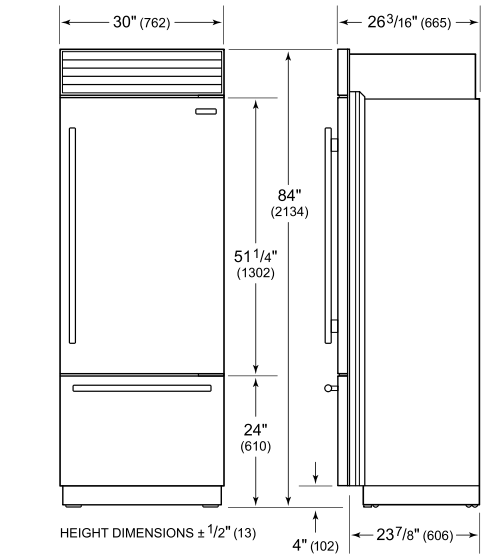

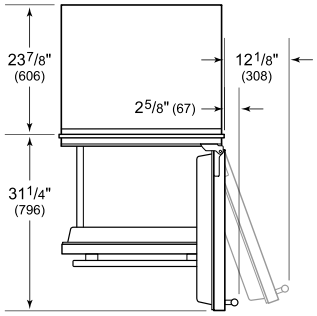

STANDARD INSTALLATION

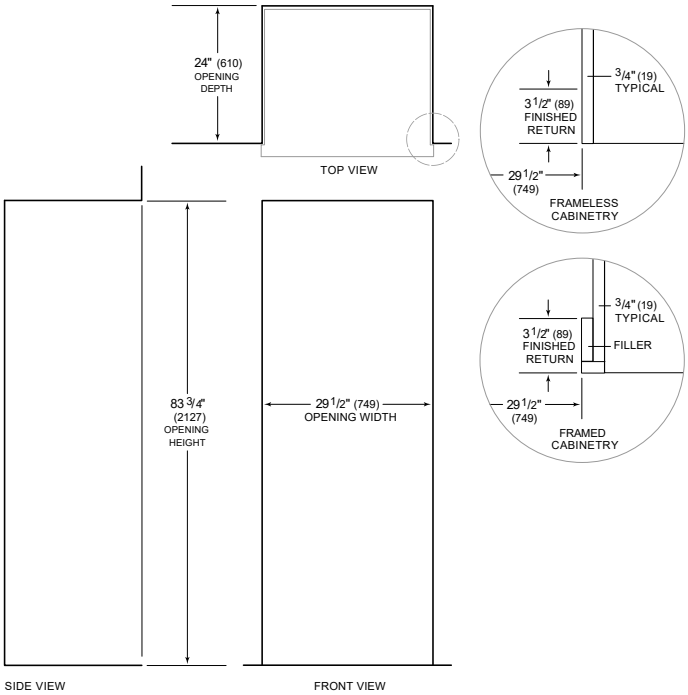

NOTE: 3 1/2" (89) finished returns will be visible and should be finished to match cabinetry
Shaded line represents profile of unit.