30" DESIGNER REFRIGERATOR/FREEZER DRAWERS WITH ICE MAKER - PANEL READY

ID-30CI

FEATURES

Accepts custom panels for an integrated look within cabinetry or stainless-steel accessory panels and handles to match other Sub-Zero, Wolf, and Cove products*

Controls temperature within one degree of setpoint

Locks in cold air to ensure freshness with magnetic door seals

Control brightness with soft-on LED lighting

Yields ice automatically and “max ice” for additional production

Open and close doors silently with soft-close technology

ACCESSORIES

Dual Installation Kit

Egg Container

Reduced Toekick Divider

Stainless Steel Pro Handles

Stainless Steel Tubular Handles

Stainless Steel Drawer Panels With Pro Handles - 4" Toe Kick

Stainless Steel Drawer Panels With Tubular Handles - 4" Toe Kick

Stainless Steel Dual Installation Kickplates

Accessories are available through an authorized dealer.
For local dealer information, visit subzero-wolf.com/locator.

PRODUCT DETAILS

REFRIGERATOR

- Adjustable drawer dividers
- LED lighting

FREEZER

- Automatic ice maker
- Removable ice container

30" DESIGNER REFRIGERATOR/FREEZER DRAWERS WITH ICE MAKER - PANEL READY

PRODUCT SPECIFICATIONS

Model	ID-30CI
Dimensions	30"W x 34 1/2"H x 24"D
Refrigerator Capacity	3 cu. ft.
Freezer Capacity	2 cu. ft.
Electrical Supply	115 VAC, 60 Hz
Electrical Service	15 amp dedicated circuit
Plumbing Supply	1/4" OD copper, braided stainless steel or PEX tubing
Plumbing Pressure	35–120 psi

ELECTRICAL

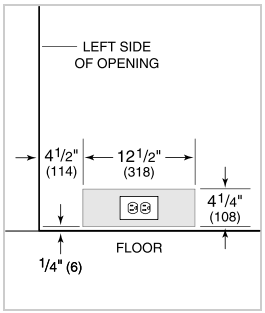

PLUMBING

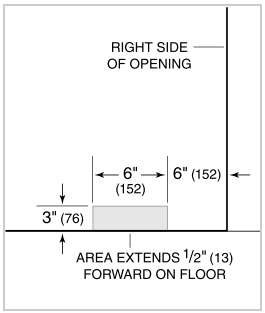

NOTE: The electrical outlet must be positioned with the grounding prong to the right of the thinner blades.

PANEL SPECIFICATIONS For complete panels specifications including width/height, weight requirements and thickness requirements visit subzero-wolf.com/reveal.

NOTE: Dimensions in parenthesis are in millimeters unless otherwise specified

INTERIOR VIEW

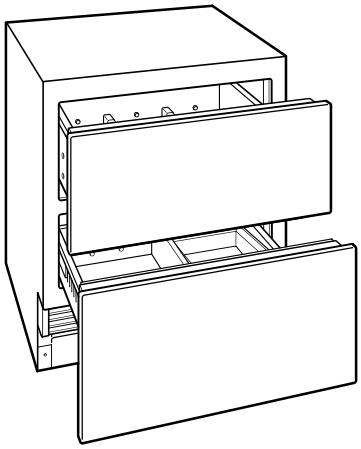

This illustration is intended for interior reference only and may not represent the exterior of the model being specified.

DIMENSIONS

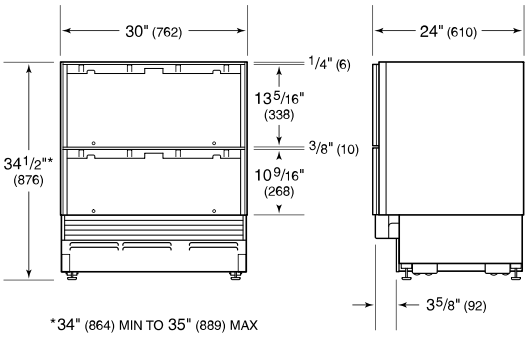

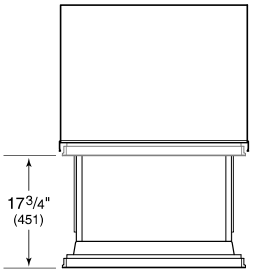

STANDARD INSTALLATION

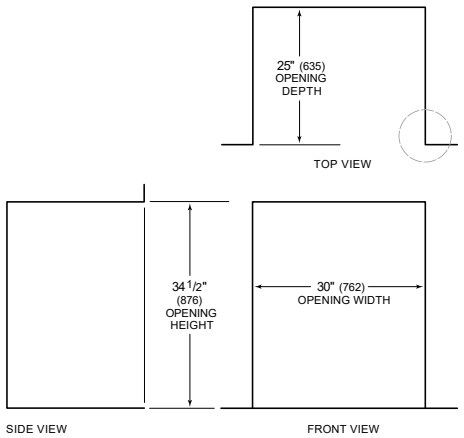
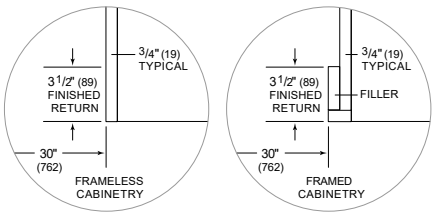
NOTE: 3 1/2" (89) finished returns will be visible and should be finished to match cabinetry