36" PRO REFRIGERATOR/FREEZER

PRO3650

FEATURES

Sub-Zero refrigerators come with an air purification system (based on technology developed by NASA) that scrubs the air of ethylene and odour every 20 minutes.

Install directly within surrounding cabinetry for built-in, or add accessory panels for freestanding

Makes an iconic stainless-steel statement, inside and out

Dual refrigeration technology preserves refrigerated foods with cool, moist air and frozen foods with frigid, dry air

Creates the ideal environment for produce in independently controlled crisper drawer

Easy access to food with full-extension slide-out glass shelf with adjustable gates

Locks in temperature and humidity with soft-close door hinge and magnetic seal on doors and drawers

Controls temperature within one degree of setpoint via intuitive exterior touch control panel

Wi-Fi enabled for convenient remote access using the Sub-Zero Group Owner's App

Automatic ice maker with advanced water filtration system

Control brightness with soft-on LED lighting that fully illuminates the cavity, making food more visible

ACCESSORIES

90° Door Stop

Air Purification Cartridge

Drawer Divider Set

Dual Installation Kit

Egg Container

Slide-Out Shelf Gates (2)

Stainless Steel Kickplates

Stainless Steel Side Panel

Stainless Steel Slide-Out Bin

Stainless Steel Top Panel

Water Filter

Accessories are available through an authorized dealer.
For local dealer information, visit subzero-wolf.com/locator.

PRODUCT DETAILS

REFRIGERATOR

- LED refrigerator and freezer lights
- 4 glass refrigerator shelves (3 adjustable; 1 full-extension slide-out)
- 1 high-humidity crisper drawer with adjustable dividers
- 2 stainless-steel slide-out bins
- Air purification system

FREEZER

- 1 full-extension roll-out freezer drawer with automatic ice maker and removable ice container

PRODUCT SPECIFICATIONS

Model	PRO3650
Dimensions	36"W x 84"H x 24"D
Refrigerator Capacity	18.4 cu. ft.
Freezer Capacity	4.3 cu. ft.
Weight	614 lbs
Electrical Supply	115 VAC, 60 Hz
Electrical Service	15 amp dedicated circuit
Plumbing Supply	1/4" OD copper, braided stainless steel or PEX tubing
Plumbing Pressure	35–120 psi
Receptacle	3-prong grounding-type

ELECTRICAL

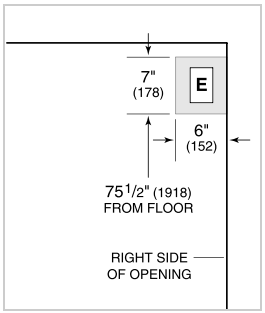

PLUMBING

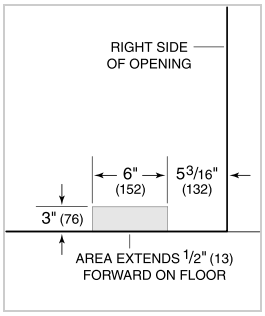

NOTE: Dimensions in parenthesis are in millimeters unless otherwise specified

INTERIOR VIEW

This illustration is intended for interior reference only and may not represent the exterior of the model being specified.

DIMENSIONS

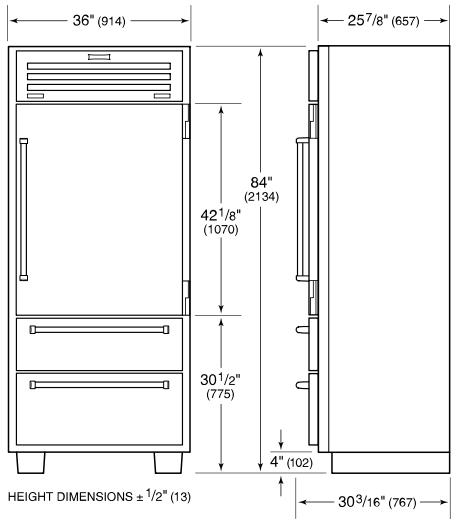

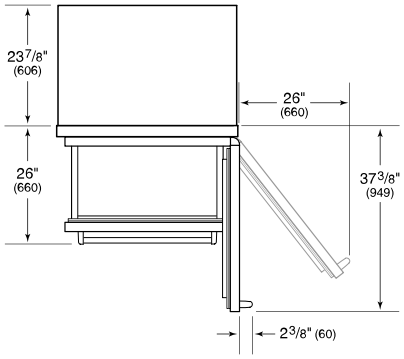

FLUSH INSET INSTALLATION

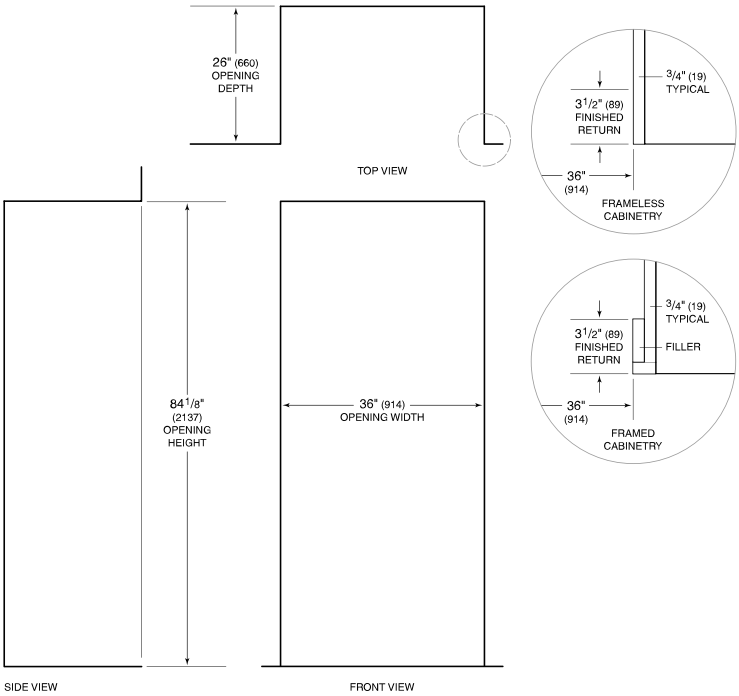

NOTE: 3 1/2" (89) finished returns will be visible and should be finished to match cabinetry.