24" UNDERCOUNTER WINE STORAGE

424G/S

FEATURES

ACCESSORIES

Dual Installation Kit

Undercounter Black Dual Kickplate

Undercounter Door Lock Kit

Undercounter Dual Lock Kit

Undercounter Silver Dual Kickplate

Undercounter Silver Kickplate

Solid overlay door

Accessories are available through an authorized dealer.
For local dealer information, visit subzero-wolf.com/locator.

HANDLE OPTIONS

PRO

TUBULAR

24" UNDERCOUNTER WINE STORAGE

PRODUCT SPECIFICATIONS

Model	424G/S
Dimensions	23 7/8"W x 34"H x 24"D
Door Clearance	25 3/8"
Weight	195 lbs
Electrical Supply	115 VAC, 60 Hz
Electrical Service	15 amp dedicated circuit
Wine Storage Capacity	46 Bottles

ELECTRICAL

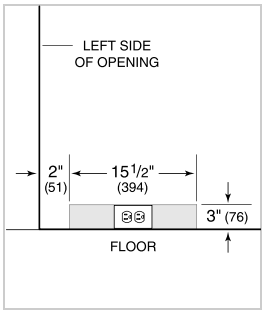

NOTE: Dimensions in parenthesis are in millimeters unless otherwise specified

INTERIOR VIEW

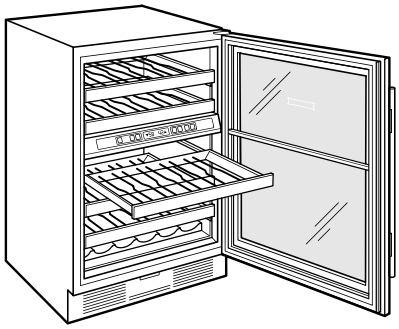

This illustration is intended for interior reference only and may not represent the exterior of the model being specified.

DIMENSIONS

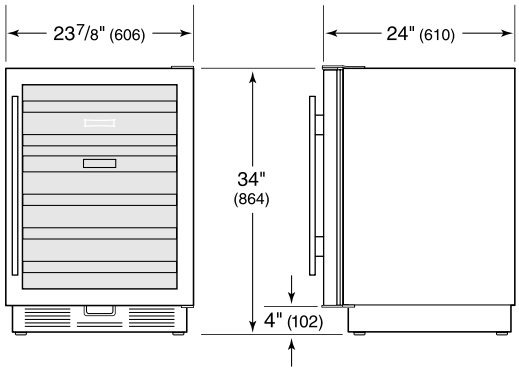

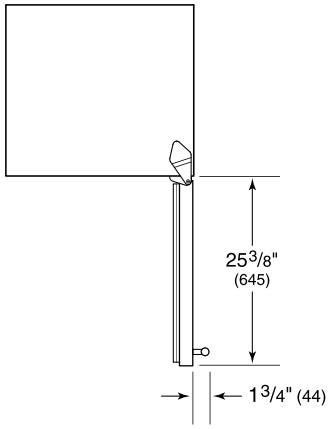

STANDARD INSTALLATION

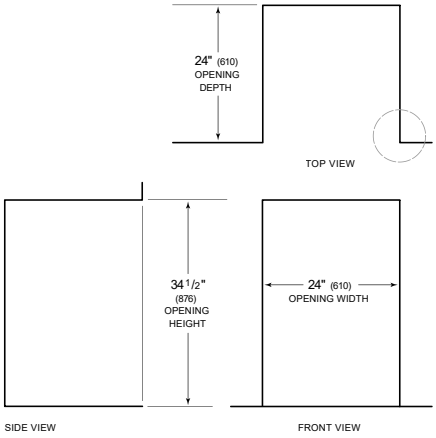

NOTE: 3 1/2" (89) finished returns will be visible and should be finished to match cabin

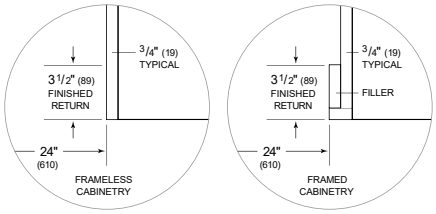

Specifications are subject to change without notice. This information was generated on April 26, 2024. Verify specifications prior to finalizing your cabinetry/enclosures.