15" DESIGNER UNDERCOUNTER WINE STORAGE - PANEL READY

DEU1550W

FEATURES

Fully customizable exterior—accepts custom panels for an integrated look within cabinetry or stainless-steel accessory panels and handles to coordinate with other Sub-Zero, Wolf, and Cove appliances

Seamlessly integrating anywhere, undercounter wine storage adds comfort to your master suite, creates a corner for libations in the study—the options are endless

Offers 24-bottle capacity

Intuitive, on-door touch control panel offers ergonomic, convenient access to settings

UV-resistant glass door shields wine from harmful light

Soft-on LED lighting fully illuminates the interior when the door is open and can be adjusted to four unique stand-by accent lighting settings

Use our convenient Owner's App to remotely control temperature zones, be notified of a door left ajar, or receive remote diagnostics

Precision temperature control to within one degree of setpoint preserves wine at its optimal temperature

Full-extension wine racks provide easy access to standard-size bottles, half bottles, and magnums without agitating others

Inventory tile system aids collection organization

ACCESSORIES

Custom Panel Lock Kit

Dual Install Kit - Handle-to-Drawer

Dual Install Kit - Handle-to-Handle

Pro Handle

Tubular Handle

Wine Inventory Tiles

Wine Inventory Tiles - Writable

Stainless Steel Glass Door Panels

Undercounter Solid Overlay Door

Stainless Steel Dual Kickplates

Accessories are available through an authorized dealer.
For local dealer information, visit subzero-wolf.com/locator.

HANDLE ACCESSORIES

PRO

TUBULAR

15" DESIGNER UNDERCOUNTER WINE STORAGE - PANEL READY

PRODUCT SPECIFICATIONS

Model	DEU1550W
Dimensions	15"W x 34 1/2"H x 23 1/8"D
Door Clearance	17 1/2"
Weight	131 lbs
Electrical Supply	115 VAC, 60 Hz
Electrical Service	15 amp dedicated circuit
Wine Storage Capacity	24 Bottles

ELECTRICAL

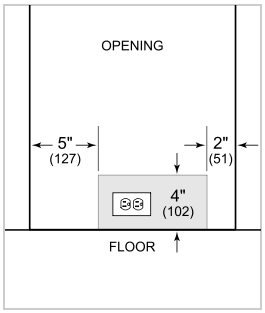

NOTE: The electrical outlet must be positioned with the grounding prong to the right of the thinner blades.

PANEL SPECIFICATIONS For complete panels specifications including width/height, weight requirements and thickness requirements visit subzero-wolf.com/reveal.

NOTE: Dimensions in parenthesis are in millimeters unless otherwise specified

INTERIOR VIEW

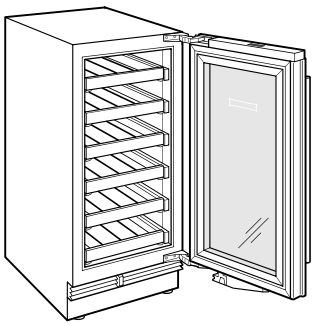

This illustration is intended for interior reference only and may not represent the exterior of the model being specified.

DIMENSIONS

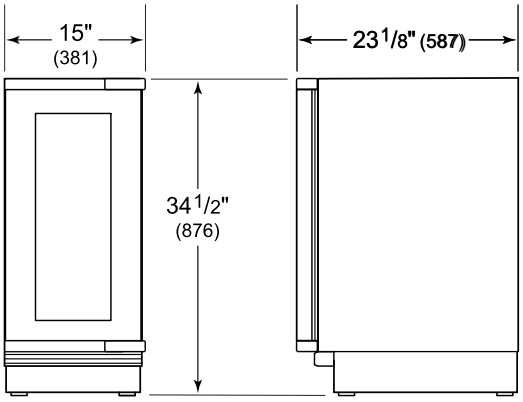

HEIGHT DIMENSIONS ± 1/2" (13)

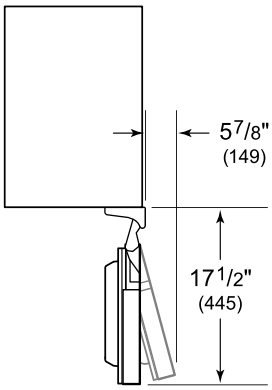

STANDARD INSTALLATION

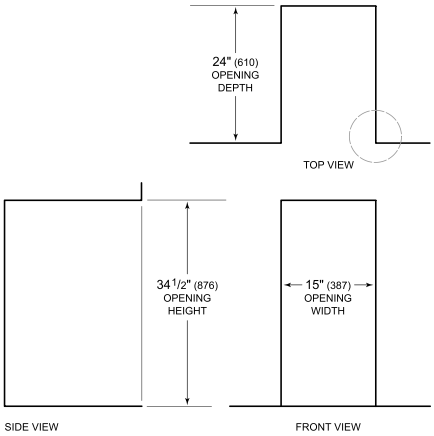
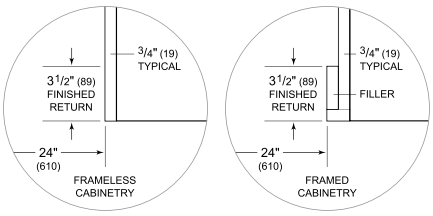
NOTE: 3 1/2" (89) finished returns will be visible and should be finished to match cabinetry.