LEGACY MODEL - 30" E SERIES TRANSITIONAL BUILT-IN SINGLE OVEN

SO30TE/S/TH

FEATURES

Control heat and airflow expertly as dual convection creates just the right cooking environment for everything from Cornish hens to cherry pie to butternut squash

Assures predictably delicious results with a variety of modes, including Convection Roast, Proof, and Dehydrate

Insert a temperature probe to tell you exactly when it is done—it will alert you the moment the dish is ready.

Includes options such as self-clean, delayed start, timed cook, Sabbath mode, and more

Versatile design to fit in any kitchen

Integrates beautifully into surrounding cabinetry with flush installation

Promotes excellent visibility via two bright halogen lights and large, double-panel-glass door windows

ACCESSORIES

30" Bake Stone Kit

30" Broiler Pan

Dehydration Kit

Dehydration Kit

Full-Extension Ball Bearing Rack

Premier Baking Sheet

Standard Oven Rack

Temperature Probe

Accessories available through an authorized dealer.
For local dealer information, visit subzero-wolf.com/locator.

LEGACY MODEL - 30" E SERIES TRANSITIONAL BUILT-IN SINGLE OVEN

PRODUCT SPECIFICATIONS

Model	SO30TE/S/TH
Dimensions	29 7/8"W x 27 7/8"H x 23 3/4"D
Oven 1 Interior Dimensions	25"W x 16 1/2"H x 19"D
Overall Capacity	4.5 cu. ft.
Usable Capacity	2.8 cu. ft.
Door Clearance	22"
Electrical Supply	240/208 VAC, 60 Hz
Electrical Service	30 amp dedicated circuit
Conduit Length	4 Feet

ELECTRICAL

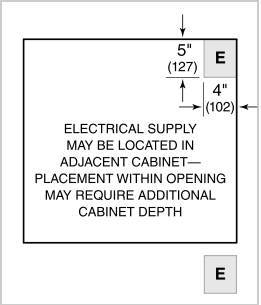

NOTE: Dimensions in parenthesis are in millimeters unless otherwise specified

DIMENSIONS

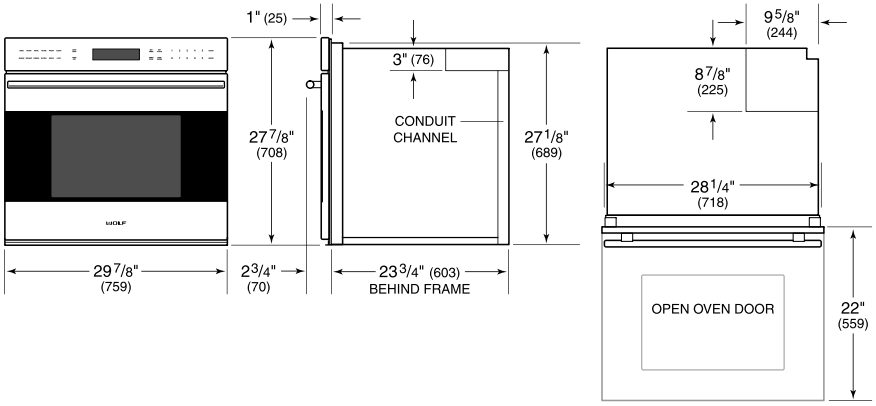

FLUSH INSTALLATION

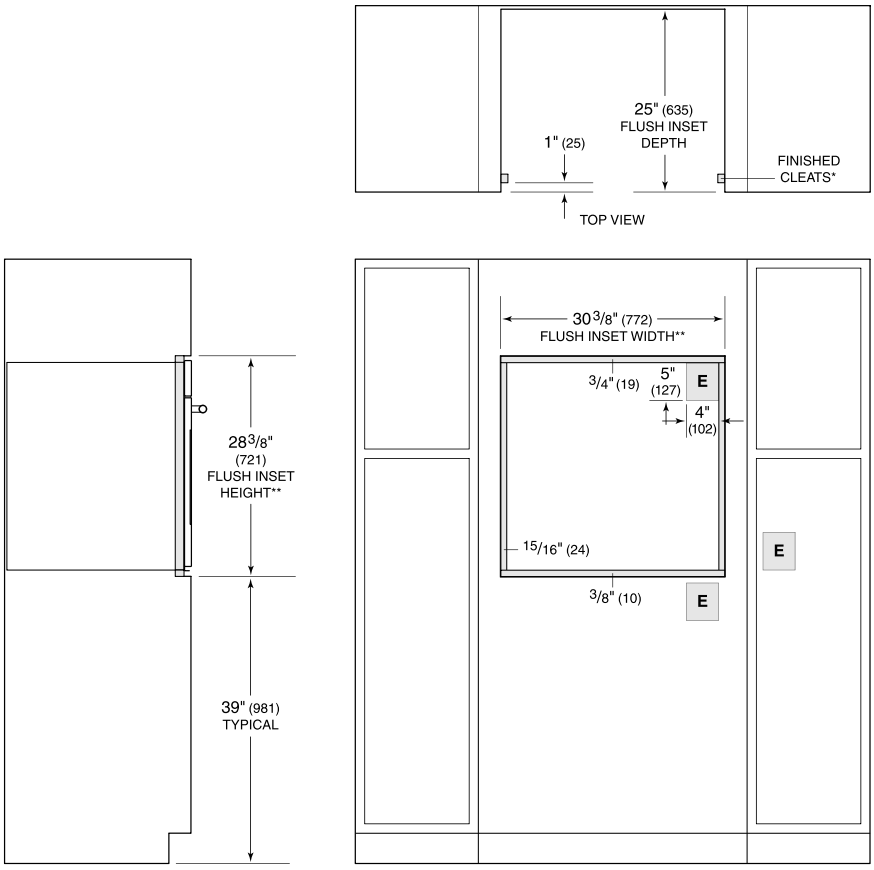

**Will be visible and should be finished to match cabinetry.*
***Dimension provides minimum reveals.*

NOTE: Location of electrical supply within opening may require additional cabinet depth.